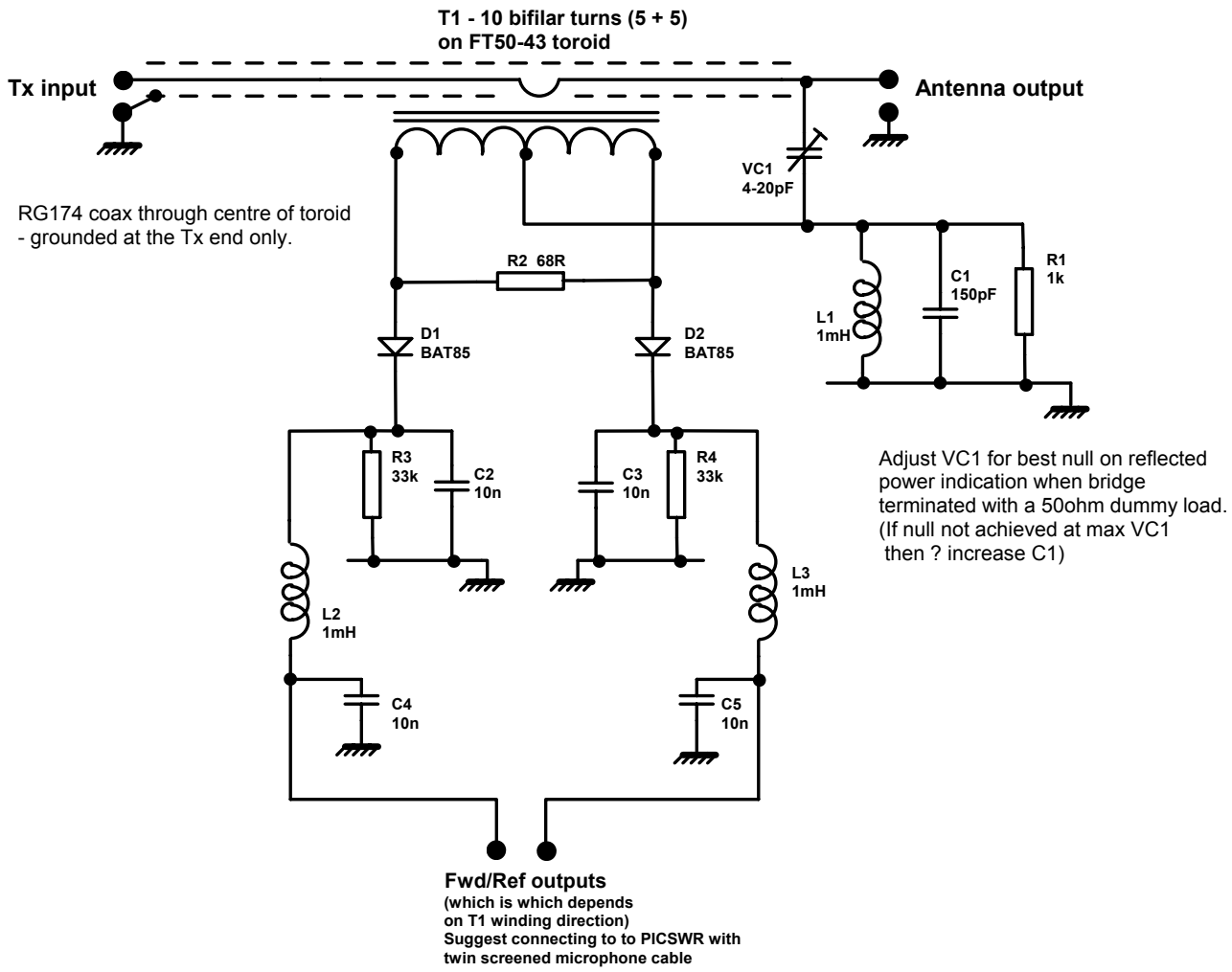

SWR bridge for PICSWR project

Circuit diagram

Ian Sumner G3VPX 22.7.2007