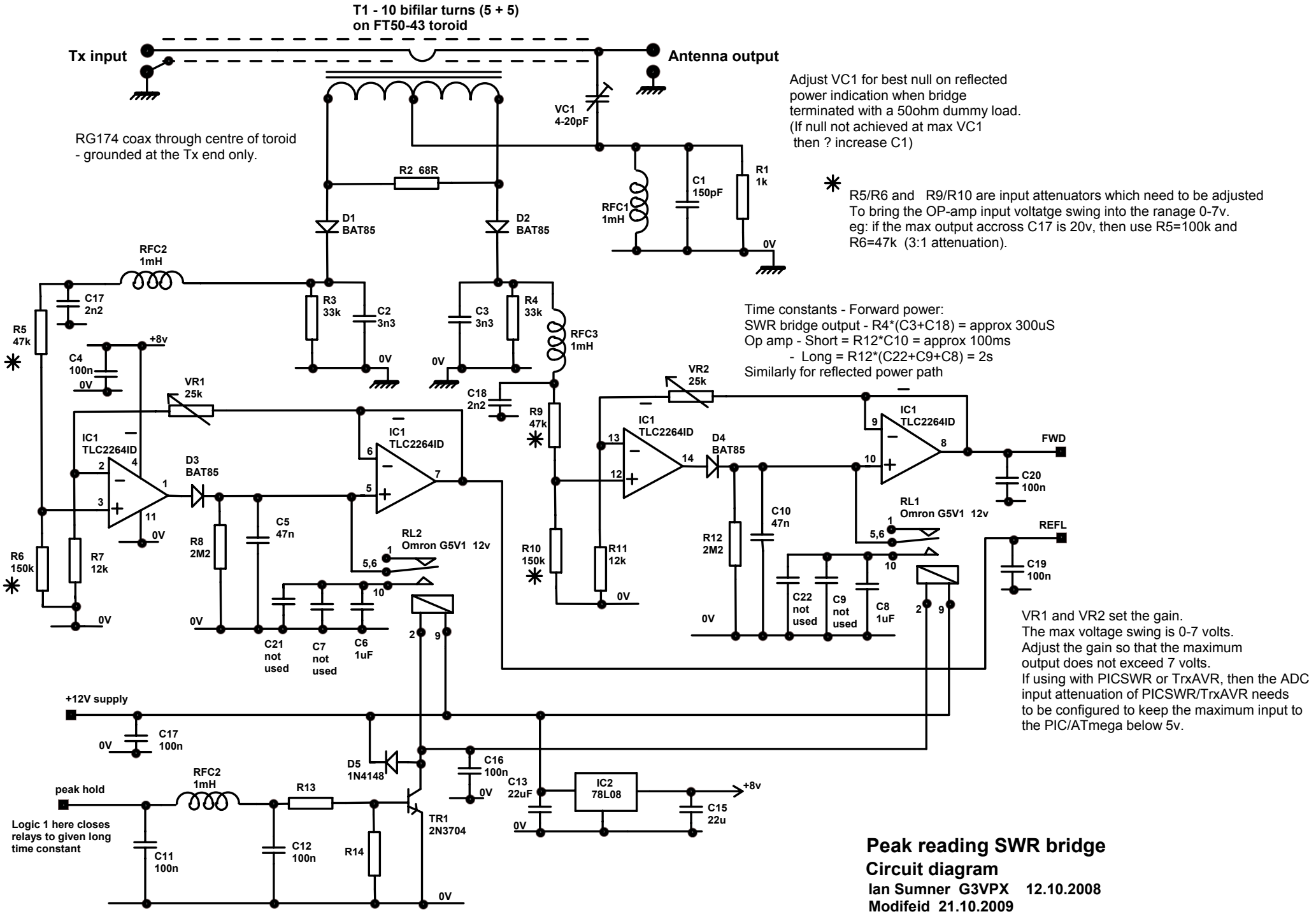
T1 - 10 bifilar turns (5 + 5)
on FT50-43 toroid
Tx input
Antenna output
VC1
4-20pF
Adjust VC1 for best null on reflected
power indication when bridge
terminated with a 50ohm dummy load.
(If null not achieved at max VC1
then ? increase C1)
RG174 coax through centre of toroid
- grounded at the Tx end only.
R2 68R
D1
BAT85
D2
BAT85
RFC1
1mH
C1
150pF
R1
1k
0V
R5/R6 and R9/R10 are input attenuators which need to be adjusted
To bring the OP-amp input voltatge swing into the ranage 0-7v.
eg: if the max output accross C17 is 20v, then use R5=100k and
R6=47k (3:1 attenuation).
RFC2
1mH
C17
2n2
R5
47k
R3
33k
C2
3n3
C3
3n3
R4
33k
RFC3
1mH
Time constants - Forward power:
SWR bridge output - R4*(C3+C18) = approx 300uS
Op amp - Short = R12*C10 = approx 100ms
- Long = R12*(C22+C9+C8) = 2s
Similarly for reflected power path
+8v
C4
100n
VR1
25k
VR2
25k
C18
2n2
R9
47k
IC1
TLC2264ID
D3
BAT85
D4
BAT85
FWD
C20
100n
RL1
Omron G5V1 12v
REFL
C19
100n
C5
47n
RL2
Omron G5V1 12v
R8
2M2
R6
150k
R7
12k
R10
150k
R11
12k
R12
2M2
C10
47n
C22
not
used
C9
not
used
C8
1uF
C21
not
used
C7
not
used
C6
1uF
VR1 and VR2 set the gain.
The max voltage swing is 0-7 volts.
Adjust the gain so that the maximum
output does not exceed 7 volts.
If using with PICSWR or TrxAVR, then the ADC
input attenuation of PICSWR/TrxAVR needs
to be configured to keep the maximum input to
the PIC/ATmega below 5v.
+12V supply
C17
100n
D5
1N4148
C16
100n
C13
22uF
IC2
78L08
C15
22u
peak hold
RFC2
1mH
R13
TR1
2N3704
Logic 1 here closes
relays to given long
time constant
C11
100n
C12
100n
R14
Peak reading SWR bridge
Circuit diagram
Ian Sumner G3VPX 12.10.2008
Modifeid 21.10.2009